CHEMICAL PUMPS SINCE 1992

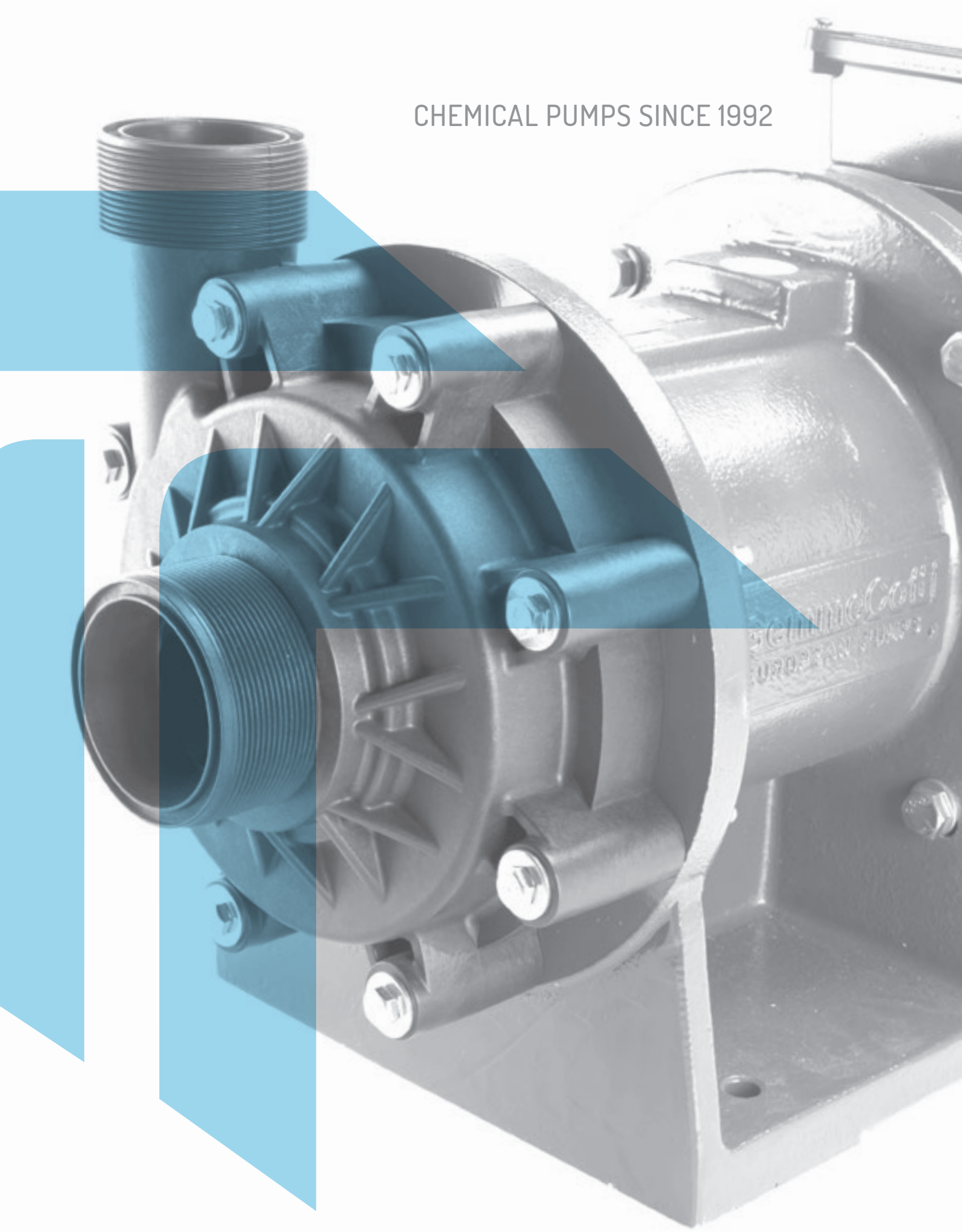

GemmeCotti
EUROPEAN PUMPS

GENERAL CATALOGUE 2018/19

MAG-DRIVE CENTRIFUGAL PUMPS

SEAL-LESS MAG DRIVE CENTRIFUGAL PUMPS

In seal-less magnetic drive centrifugal pumps, the external magnet is directly connected to the motor shaft and it transmits the torque to the internal magnet.
The magnetic field created produces a rotation without physical contact between the parts so the impeller spins and moves the fluid. The rear casing is placed between the two magnet joints and it hermetically closes the hydraulic part from the motor.

GemmeCotti can supply three different models of mag drive centrifugal pumps:

HTM PP/PVDF

- Thermoplastic pumps made in PP or PVDF.
- Capacity up to 45 m3/h.
- Head up to 33 mlc.
- Injection molded parts.

HCM

- Thermoplastic pumps made in PP or PVDF.
- Capacity up to 130 m3/h.
- Head up to 48 mlc.
- Pump head machined from a block.

HTM SS 316

- Metallic pumps made in stainless steel AISI316.
- Capacity up to 32 m3/h.
- Head up to: 24 mlc.

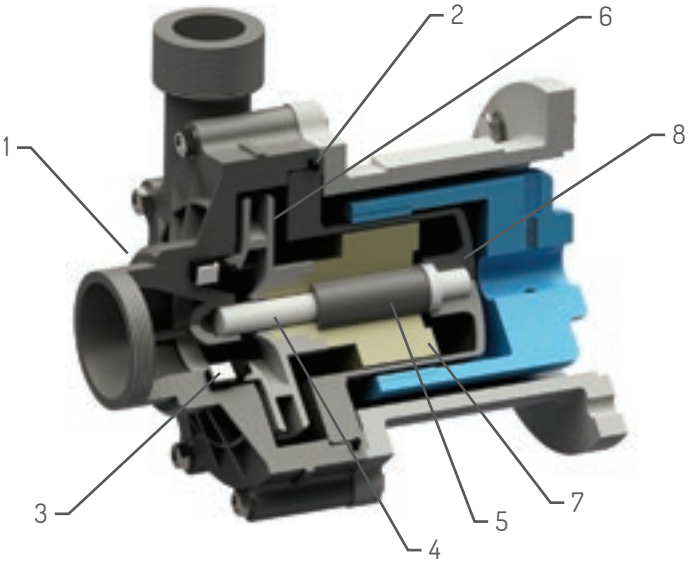

MATERIALS IN CONTACT WITH THE LIQUID			
PART NUMBER - DESCRIPTION	CENTRIFUGAL PUMPS		
	HTM PP/PVDF	HCM	HTM SS 316
1 – PUMP HEAD	PP OR PVDF	PP OR PVDF	AISI 316
2 - O-RING	EPDM OR VITON	EPDM OR VITON	EPDM OR VITON
3 - CASING THRUST BUSH	CERAMIC Al_2O_3 + EPDM OR VITON	CERAMIC Al_2O_3 + EPDM OR VITON	PTFEC
4 - SHAFT	CERAMIC Al_2O_3 99,7%	CERAMIC Al_2O_3 99,7%	HASTELLOY-C 276
5 - BEARINGS	PTFEC	PTFEC	PTFEC
6 - IMPELLER	PP OR PVDF	PP OR PVDF	AISI 316
7 - INTERNAL MAGNET	PP OR PVDF + NdFeB	PP OR PVDF + NdFeB	AISI 316 + SmCo
8 - REAR CASING	PP OR PVDF	PP OR PVDF	AISI 316

HTM SS 316

METALLIC MAG-DRIVE CENTRIFUGAL PUMPS

MAIN FEATURES

Mag drive centrifugal pumps series HTM SS are made of AISI 316 or, on request, of other metallic materials (such as HASTELLOY or TITANIUM) and are suitable for hydrocarbons, solvents and dangerous liquids. Thanks to the innovative mag drive design, pumps model HTM SS reduce the risks of leakage and emissions and the maintenance costs. The transmission of the motion occurs through magnetic joints without any mechanical seal. This design guarantees the maximum safety and efficiency. The pumped liquid has to be clean and without solids in suspension. Pumps series HTM SS 316 are also available in ATEX version for zone 1 and 2 (pump model EM-C).

STANDARD:

- Threaded in and out connections.

OPTIONAL:

- Pump available in other materials (HC 276; Titanium).
- Atex version (pumps mod. EM-C).
- Explosion proof motor.
- Flanges available.
- Dry-running protection.
- Baseplate.
- Overload switch.

- Materials available: AISI 316;
- Materials in contact with the liquid:
  casing and impeller: stainless steel AISI 316;
  o-ring: EPDM/VITON;
  bushing: PTFE/CARBON;
  shaft: Hastelloy C276.
- Max flow: 32 m3/h; max head: 24 mlc.
- Max temperature: 160° C.
- Max viscosity: 200 cSt.
- Pressure rating: NP 10 at 20° C.

PERFORMANCE CURVES 50HZ - 2900 RPM

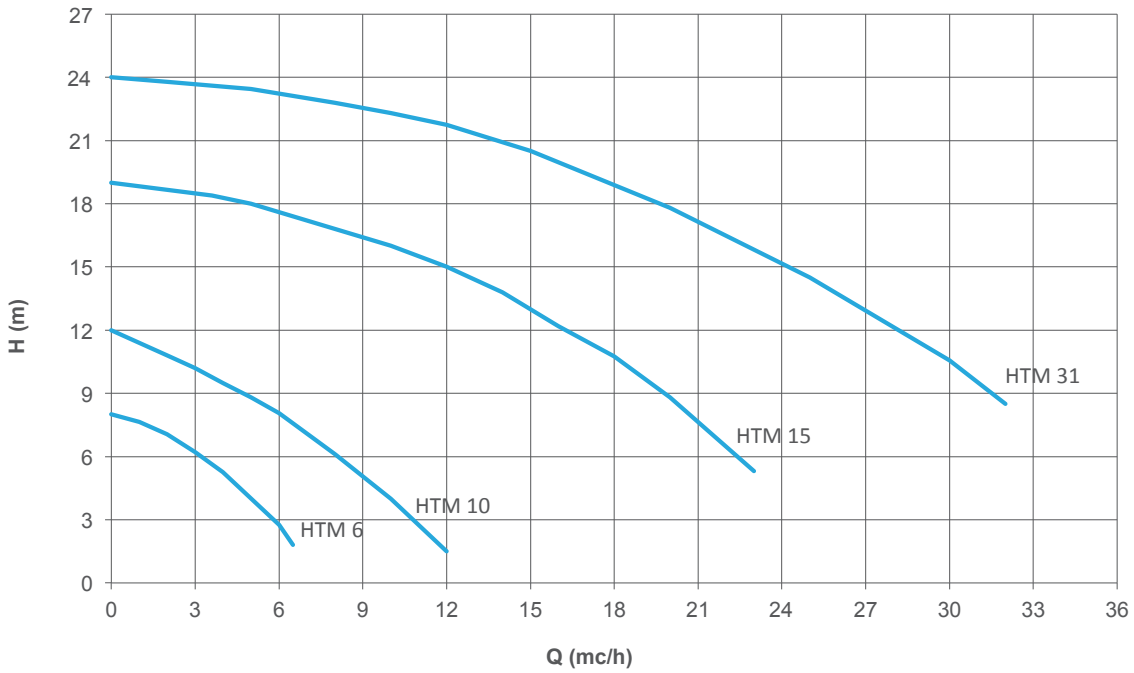

HTM SS 316 TECHNICAL DATA

PUMP SIZE	MATERIAL	Q MAX		H MAX		SUCTION CONNECTION	DISCHARGE CONNECTION	PUMP WEIGHT (KG)	SUITABLE MOTOR POWER (KW) 2900 rpm / FLANGE AND FRAME
		50HZ (M3/H)	60HZ (USGPM)	50HZ (MLC)	60HZ (FT)				
HTM 6	AISI316	6	30	8	42	1" FEMALE	3/4" MALE	6.2	0,55 / 71 B - B3/B5
HTM 10	AISI316	12	50	12	52	1 1/2" FEMALE	1" MALE	11.7	1,1 / 80 B - B3/B5
HTM 15	AISI316	23	117	19	85	2" MALE	1 1/2" MALE	17	1,5 / 90 S - B3/B5
HTM 31	AISI316	32	180	24	110	2 1/2" MALE	2" MALE	20	2,2 / 90 L - B3/B5

HTM 6-10 SS316 • EM-C 6-10 SS316 (ATEX VERSION)
DIMENSIONS

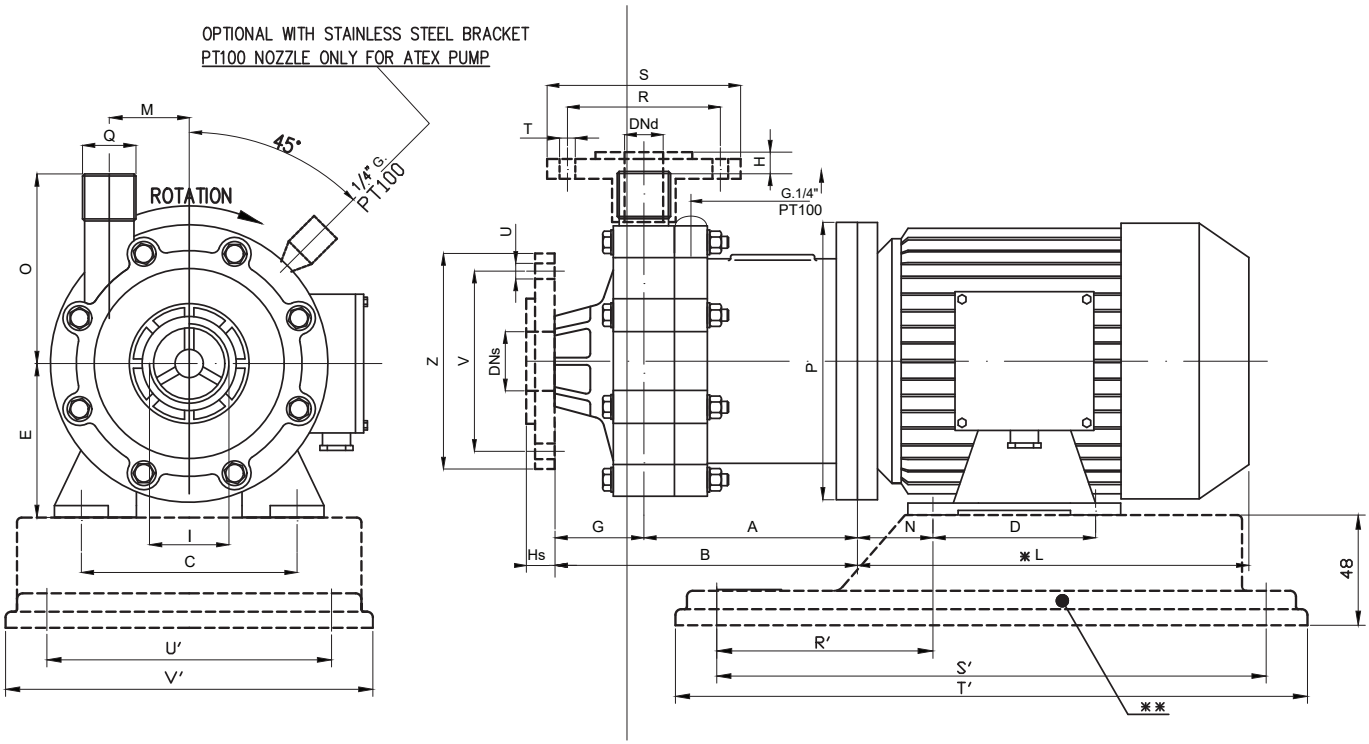

PUMP TYPE	FLANGES DIMENSIONS - mm -							
	R	S	T	U	V	Z	DNs	DNd
HTM 6 SS316	75	105	14	14	85	115	25	20
HTM 10 SS316	85	115	14	18	110	150	40	25

PUMP TYPE	MOTOR FLANGE B3 - B5	KW	DIMENSIONS - mm -															BASEPLATE DIMENSIONS - mm -				
			A	B	C	D	E	F	G	H	I	-L	M	N	O	P	Q	R'	S'	T'	U'	V'
HTM 6 SS316	71 B	0,55	137	194	112	90	71	24	57	4	1" FEMALE	215	46	45	89	160	3/4 MALE	102	244	280	130	160
HTM 10 SS316	80 B	1,1	145	214	125	100	80	20	69	8	1" 1/2 FEMALE	232	44	50	98	200	1" MALE	120	302	350	157	205

NOTE: DIRECTION OF ROTATION IS COUNTER CLOCKWISE AS SEEN WHEN FACING THE MOTOR.
PUMPS AVAILABLE THREADED OR FLANGED.

HTM 15-31 SS316 • EM-C 15-31 SS316 (ATEX VERSION)
DIMENSIONS

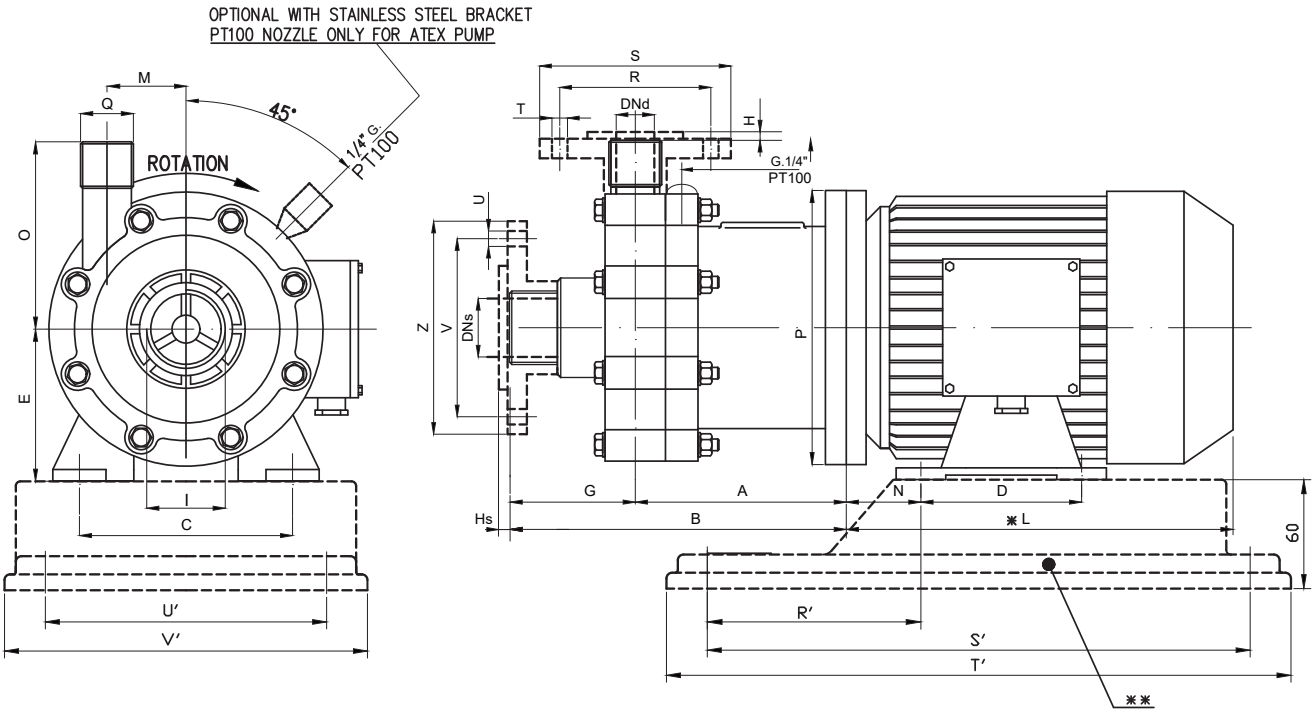

PUMP TYPE	FLANGES DIMENSIONS - mm -							
	R	S	T	U	V	Z	DNs	DNd
HTM 15 SS316	110	153	18	18	125	168	50	40
HTM 31 SS316	125	168	18	18	145	188	65	50

PUMP TYPE	MOTOR FLANGE B3 - B5	KW	DIMENSIONS - mm -															BASEPLATE DIMENSIONS - mm -				
			A	B	C	D	E	Hs	G	H	I	-L	M	N	O	P	Q	R'	S'	T'	U'	V'
HTM 15 SS316	90 S	1,5	177	257	140	100	90	6	80	4	2" G. MALE	255	66	56	135	200	1"1/2 G. MALE	132	302	350	157	205
HTM 31 SS316	90 L	2,2	175	266	140	125	90	6,5	91	6	2"1/2 G. MALE	280	66	56	140	200	2" MALE	132	302	350	157	205

NOTE: DIRECTION OF ROTATION IS COUNTER CLOCKWISE AS SEEN WHEN FACING THE MOTOR.
PUMPS AVAILABLE THREADED OR FLANGED.

kifadesign.it

GemmeCotti
EUROPEAN PUMPS

GEMMECOTTI SRL
Via A. Volta 85/A
20816 Ceriano Laghetto MB
ITALY
EUROPEAN UNION

Ph: +39 02.96460406
Fax: +39 02.96469114

info@gemmecotti.com
www.gemmecotti.com

DOC E2.30.2